FOR REFERENCE
2021.10.12
DAEYANG ELEC CO., LTD.

CAPACITY	SYMBOL/SERIAL NO.	CIRCUIT DIAGRAM
AC 100~240V, 50/60Hz	L550	LED driver — LED module
275W x 2		

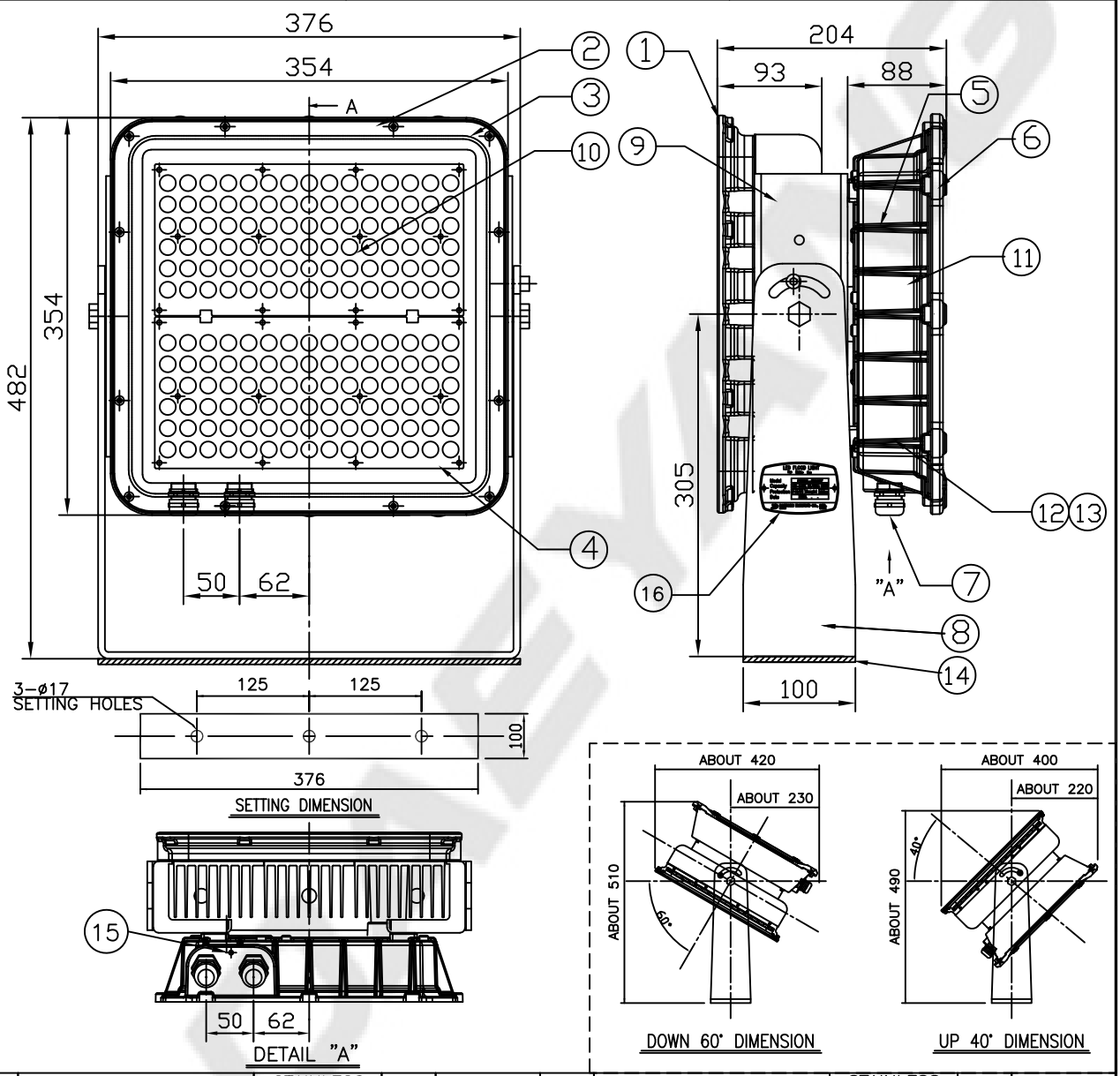

NO	NAME OF PARTS	MATERIAL	Q'TY	REMARKS	NO	NAME OF PARTS	MATERIAL	Q'TY	REMARKS
16	NAME PLATE	STAINLESS STEEL316L	1		8	ARM	STAINLESS STEEL316L	1	
15	OUTSIDE EARTH BOLT	STAINLESS STEEL316L	1	M5	7	CABLE GLAND(R25M)	BRASS	2	ø9~ø17
14	ANTI-VIBRATION PACKING	C.R.	1	5mm	6	LED driver CASE COVER	ALUMINIUM	1	
13	INSIDE EARTH BOLT	STAINLESS STEEL304	1		5	LED driver CASE	ALUMINIUM	1	
12	TERMINAL BLOCK	–	2		4	FRONT GLASS	GLASS	1	
11	LED driver	–	2	DLD-45275 -PFN	3	GLOBE PACKING	SILICONE	1	
10	LED module	–	2	6,000±300K	2	GLOBE FRAME	STAINLESS STEEL316L	1	
9	BODY BRACKET	STAINLESS STEEL316L	2		1	BODY	ALUMINIUM	1	

APPROVED	O. J. KWON	UNIT	MM
CHECKED	W. J. JI	SCALE	N/S
DESIGN	J. C. LEE	COLOR	N-9.3
DATE	2018.12.17	IP	66/67

TITLE:

LED FLOOD LIGHT

FOR MARINE USE

DAEYANG

MODEL NO.	PF550L-550AWCFNC60(R25M)	WEIGHT	26 Kg
DRAWING NO.	LR6530116	SHEET NO.	75

[보안인증] 신화식 2021/05/10 14:40:52